Mapei UK Ltd
Mapei House
Steel Park Road
Halesowen
West Midlands B62 8HD

Tel: 0121 508 6970 Fax: 0121 508 6960
e-mail: info@mapei.co.uk
website: www.mapei.co.uk

Agrément Certificate
13/4977
Product Sheet 2

MAPEI UK EXTERNAL WALL INSULATION SYSTEMS

MAPETHERM MINERAL WOOL EXTERNAL WALL INSULATION SYSTEM

This Agrément Certificate Product Sheet[1] relates to the Mapetherm Mineral Wool External Wall Insulation System, mechanically fixed with supplementary adhesive, comprising mineral wool (MW) fibre insulation slabs, with reinforced basecoat and render finishes. The system is suitable for use on the outside of external masonry walls in new and existing domestic and non-domestic buildings, with height and boundary restrictions.

(1) Hereinafter referred to as 'Certificate'.

CERTIFICATION INCLUDES:
- factors relating to compliance with Building Regulations where applicable
- factors relating to additional non-regulatory information where applicable
- independently verified technical specification
- assessment criteria and technical investigations
- design considerations
- installation guidance
- regular surveillance of production
- formal three-yearly review.

KEY FACTORS ASSESSED

Thermal performance — the system can be used to improve the thermal performance of external walls and can contribute to satisfying the requirements of the national Building Regulations (see section 6).

Strength and stability — the system can adequately resist wind loads and impact damage (see section 7).

Behaviour in relation to fire — the Certificate holder has not declared a reaction to fire classification for the system to BS EN 13501-1 : 2018 and its use is restricted (see section 8).

Risk of condensation — the system can contribute to limiting the risk of interstitial and surface condensation (see section 11).

Durability — when installed and maintained in accordance with the Certificate holder's recommendations and the terms of this Certificate, the system will remain effective for at least 30 years (see section 13).

The BBA has awarded this Certificate to the company named above for the system described herein. This system has been assessed by the BBA as being fit for its intended use provided it is installed, used and maintained as set out in this Certificate.

On behalf of the British Board of Agrément

Date of Second issue: 23 May 2018

John Albon – Head of Approvals
Construction Products

Claire Curtis-Thomas
Chief Executive

Originally certificated on 21 June 2013

Certificate amended on 30 April 2020 regarding a revised fire classification and associated text.

British Board of Agrément
Bucknalls Lane
Watford
Herts WD25 9BA
tel: 01923 665300
clientservices@bbacerts.co.uk
www.bbacerts.co.uk

Regulations

In the opinion of the BBA, the Mapetherm Mineral Wool External Wall Insulation System, if installed, used and maintained in accordance with this Certificate, can satisfy or contribute to satisfying the relevant requirements of the following Building Regulations (the presence of a UK map indicates that the subject is related to the Building Regulations in the region or regions of the UK depicted):

The Building Regulations 2010 (England and Wales) (as amended)

Requirement:	**A1**	**Loading**
Comment:		The system can sustain and transmit wind loads to the substrate wall. See sections 7.1 to 7.12 of this Certificate.
Requirement:	**B4(1)**	**External fire spread**
Comment:		The system is restricted by this Requirement. See sections 8.1 and 8.2 of this Certificate.
Requirement:	**C2(b)**	**Resistance to moisture**
Comment:		The system provides a degree of protection against rain ingress. See section 10.1 of this Certificate.
Requirement:	**C2(c)**	**Resistance to moisture**
Comment:		The system can contribute to minimising the risk of interstitial and surface condensation. See sections 11.1, 11.2 and 11.4 of this Certificate.
Requirement:	**L1(a)(i)**	**Conservation of fuel and power**
Comment:		The system can contribute to satisfying this Requirement. See sections 6.2 and 6.3 of this Certificate.
Regulation:	**7(1)**	**Materials and workmanship**
Comment:		The system is acceptable. See section 13.1 and the *Installation* part of this Certificate.
Regulation:	**7(2)**	**Materials and workmanship**
Comment:		The system is restricted by this Regulation. See sections 8.1 and 8.2 of this Certificate
Regulation:	**26**	**CO_2 emission rates for new buildings**
Regulation:	**26A**	**Fabric energy efficiency rates for new dwellings (applicable to England only)**
Regulation:	**26A**	**Primary energy consumption rates for new buildings (applicable to Wales only)**
Regulation:	**26B**	**Fabric energy efficiency rates for new dwellings (applicable to Wales only)**
Comment:		The system can contribute to satisfying these Regulations. See sections 6.2 and 6.3 of this Certificate.

The Building (Scotland) Regulations 2004 (as amended)

Regulation:	**8(1)(2)**	**Durability, workmanship and fitness of materials**
Comment:		The system can contribute to a construction satisfying this Regulation. See sections 12 and 13.1 and the *Installation* part of this Certificate.
Regulation:	**9**	**Building standards applicable to construction**
Standard:	1.1	Structure
Comment:		The system can sustain and transmit wind loads to the substrate wall. See sections 7.1 to 7.12 of this Certificate.
Standard:	2.6	Spread to neighbouring buildings
Comment:		The system is restricted by this Standard, with reference to clauses 2.6.4(1)(2), 2.6.5(1) and 2.6.6(2). See sections 8.1, 8.3 and 8.4 of this Certificate.

Standard:	2.7	Spread on external walls
Comment:		The system is restricted by this Standard, with reference to clause 2.7.1[(1)(2)]. See sections 8.1, 8.3 and 8.4 of this Certificate.
Standard:	3.10	Precipitation
Comment:		The system can contribute to a construction satisfying this Standard, with reference to clauses 3.10.1[(1)(2)] and 3.10.2[(1)(2)]. See section 10.1 of this Certificate.
Standard:	3.15	Condensation
Comment:		The system can contribute to satisfying this Standard, with reference to clauses 3.15.1[(1)(2)], 3.15.4[(1)(2)] and 3.15.5[(1)(2)]. See sections 11.3 and 11.4 of this Certificate.
Standard:	6.1(b)	Carbon dioxide emissions
Standard:	6.2	Buildings insulation envelope
Comment:		The system can contribute to satisfying these Standards, with reference to clauses (or parts of) 6.1.1[(1)], 6.1.2[(1)(2)], 6.1.3[(1)(2)], 6.1.6[(1)], 6.1.10[(2)], 6.2.1[(1)(2)], 6.2.3[(1)], 6.2.4[(2)], 6.2.5[(2)], 6.2.6[(1)], 6.2.7[(1)], 6.2.8[(2)], 6.2.9[(1)(2)], 6.2.10[(1)], 6.2.11[(1)], 6.2.12[(2)] and 6.2.13[(1)(2)]. See sections 6.2 and 6.3 of this Certificate.
Standard:	7.1(a)(b)	Statement of sustainability
Comment:		The system can contribute to satisfying the relevant requirements of Regulation 9, Standards 1 to 6, and therefore will contribute to a construction meeting the bronze level of sustainability as defined in this Standard. In addition, the system can contribute to a construction meeting a higher level of sustainability as defined in this Standard with reference to clauses 7.1.4[(1)(2)] [Aspect 1[(1)(2)] and 2[(1)]], 7.1.6[(1)(2)] [Aspect 1[(1)(2)] and 2[(1)]] and 7.1.7[(1)(2)] [Aspect 1[(1)(2)]]. See section 6.2 of this Certificate.
Regulation:	**12**	**Building standards applicable to conversions**
Comment:		All comments given for the system under Regulation 9, Standards 1 to 6, also apply to this Regulation, with reference to clause 0.12.1[(1)(2)] and Schedule 6[(1)(2)].

(1) Technical Handbook (Domestic).
(2) Technical Handbook (Non-Domestic).

The Building Regulations (Northern Ireland) 2012 (as amended)

Regulation:	**23**	**Fitness of materials and workmanship**
Comment:		The system is acceptable. See section 13.1 and the *Installation* part of this Certificate.
Regulation:	**28(b)**	**Resistance to moisture and weather**
Comment:		Walls insulated with the system will satisfy this Regulation. See section 10.1 of this Certificate.
Regulation:	**29**	**Condensation**
Comment:		Walls insulated with the system can satisfy this Regulation. See section 11.4 of this Certificate.
Regulation:	**30**	**Stability**
Comment:		The system can sustain and transmit wind loads to the substrate wall. See sections 7.1 to 7.12 of this Certificate.
Regulation:	**36(a)**	**External fire spread**
Comment:		The system is restricted by this Regulation. See sections 8.1 and 8.2 of this Certificate.
Regulation:	**39(a)(i)**	**Conservation measures**
Comment:		The system can contribute to satisfying this Regulation. See sections 6.2 and 6.3 of this Certificate.

Regulation:	**40**	**Target carbon dioxide emission rate**
Comment:		The system can contribute to satisfying this Regulations. See sections 6.2 and 6.3 of this Certificate.

Construction (Design and Management) Regulations 2015
Construction (Design and Management) Regulations (Northern Ireland) 2016

Information in this Certificate may assist the client, designer (including Principal Designer) and contractor (including Principal Contractor) to address their obligations under these Regulations.

See section: 3 *Delivery and site handling* (3.2) of this Certificate.

Additional Information

NHBC Standards 2018

In the opinion of the BBA, the Mapetherm Mineral Wool External Wall Insulation System, if installed, used and maintained in accordance with this Certificate, can satisfy or contribute to satisfying the relevant requirements in relation to *NHBC Standards*, Part 6 *Superstructure (excluding roofs)*, Chapter 6.9 *Curtain walling and cladding*.

Technical Specification

1 Description

1.1 The Mapetherm Mineral Wool External Wall Insulation System comprises MW insulation slabs, reinforced basecoat, primer and render finishes, for application onto the external walls of masonry construction (see Figure 1).

1.2 The insulation slabs are fixed to the external surface of the wall using mechanical fixings and supplementary adhesive (ensuring a minimum of 40% coverage of adhesive is achieved after the slabs have been pressed against the wall). The basecoat is prepared as described in section 16.19 and is applied over the insulation surface to a uniform thickness. Glassfibre mesh is positioned into the basecoat immediately after its application and trowelled into position, ensuring it is fully embedded within the basecoat. A further layer of basecoat is applied in order to achieve the final thickness required. After the basecoat has cured, appropriate primer (depending on the finishing coat) is applied and allowed to fully dry prior to the application of the finishing coat (see section 1.3). The thickness of the finish coat is regulated by the particle size.

1.3 The system is made up of the following components;

Adhesive (supplementary)

- Mapetherm AR1 GG — polymer-modified, cement-based mortar comprising limestone sand, cement, synthetic resins and other additives, supplied as a powder which is prepared by mixing each bag with 5 to 6 litres of clean water, to give a coverage of 4 to 6 $kg \cdot m^{-2}$. Available in white and grey, and can be used as either insulation slab adhesive or as a basecoat

Insulation(1)

- Mapetherm MW Dual Density 036 — dual density MW slabs, 1200 by 600 mm, in a range of thicknesses between 40(2) and 250 mm, with nominal densities of 160/100 $kg \cdot m^{-3}$ (outer/inner layer), a minimum compressive strength of 20 kPa and a tensile resistance perpendicular to the faces of 10 kPa. Slabs are manufactured to comply with BS EN 13162 : 2012

(1) For declared thermal conductivity values (λ_D), see section 6.1.
(2) Insulation thicknesses of 40 and 50 mm would generally be used in reveals.

Mechanical fixings

- Mapetherm mechanical fixings[1] — fixing anchors of adequate length to suit the substrate and insulation thickness, approved and supplied by the Certificate holder, as follows:
  - EJOT H1 eco — HDPE anchor sleeve with galvanized steel pin and a polyamide, PA GF 50 mounting plug

(1) Other fixings with an ETA may be used provided they can be demonstrated to have equal or higher pull-out, plate diameter and plate stiffness characteristics.

Basecoat

- Mapetherm AR1 GG — polymer-modified, cement-based mortar comprising limestone sand, cement, synthetic resins and other additives, supplied as a powder which is prepared by mixing each bag with 5 to 6 litres of clean water, to give a coverage of 4 to 6 $kg \cdot m^{-2}$. Available in white and grey, and can be used as either insulation slab adhesive or as a basecoat. Applied to a thickness of between 4.0 and 7.0 mm

Reinforcement

- Mapetherm Net — 1.0 m wide multi-stranded, woven, alkali-resisting glassfibre reinforcing mesh with a nominal weight of 155 $g \cdot m^{-2}$ and an aperture size between 3.8 and 4.2 mm, supplied in 50 m lengths

Primer[1]

- Quarzolite Base Coat Primer — a coloured, acrylic-resin-based emulsion containing fine quartz particles and binders, for use as a bonding-agent and pre-coat treatment
- Silancolor Base Coat Primer — a deep penetration silicone-resin-based emulsion, for use as a bonding-agent and pre-coat treatment
- Silexcolor Base Coat Primer — a transparent, ready to use modified potassium silicate solution, for use as a bonding-agent and a pre-coat treatment

(1) All Mapetherm liquid primers can be applied by brush, roller or spray.

Finishing coats[1]

- Quarzolite Tonachino — a ready to use acrylic-resin-based render available in particle sizes of 0.7, 1.2, 1.5 and 2.0 mm, to give coverage rates of 1.7 to 2, 2.3, 2.2 to 2.6 and 2.6 to 3 $kg \cdot m^{-2}$ respectively
- Quarzolite Graffiato — a ready to use acrylic-resin-based render available in particle sizes of 1.2 and 1.8 mm, to give coverage rates of 1.9 to 2.3 and 2.4 to 2.8 $kg \cdot m^{-2}$ respectively
- Silancolor Tonachino — a ready to use silicone-resin-based render available in particle sizes of 0.7, 1.2, 1.5 and 2.0 mm, to give coverage rates of 1.7 to 2, 1.9 to 2.3, 2.2 to 2.6 and 2.6 to 3.0 $kg \cdot m^{-2}$ respectively
- Silancolor Graffiato — a ready to use silicone-resin-based render available in particle sizes of 1.2 and 1.8 mm, to give coverage rates of 1.9 to 2.3 and 2.4 to 2.8 $kg \cdot m^{-2}$ respectively
- Silexcolor Tonachino — a ready to use modified potassium-silicate-mineral-based render available in particle sizes of 0.7, 1.2, 1.5 and 2.0 mm, to give coverage rates of 1.7 to 2, 1.9 to 2.3, 2.2 to 2.6 and 2.6 to 3.0 $kg \cdot m^{-2}$ respectively
- Silexcolor Graffiato — a ready to use modified potassium-silicate-mineral-based render available in particle sizes of 1.2 and 1.8 mm, to give coverage rates of 1.9 to 2.3 and 2.4 to 2.8 $kg \cdot m^{-2}$ respectively.

Figure 1 The Mapetherm Mineral Wool External Wall Insulation System

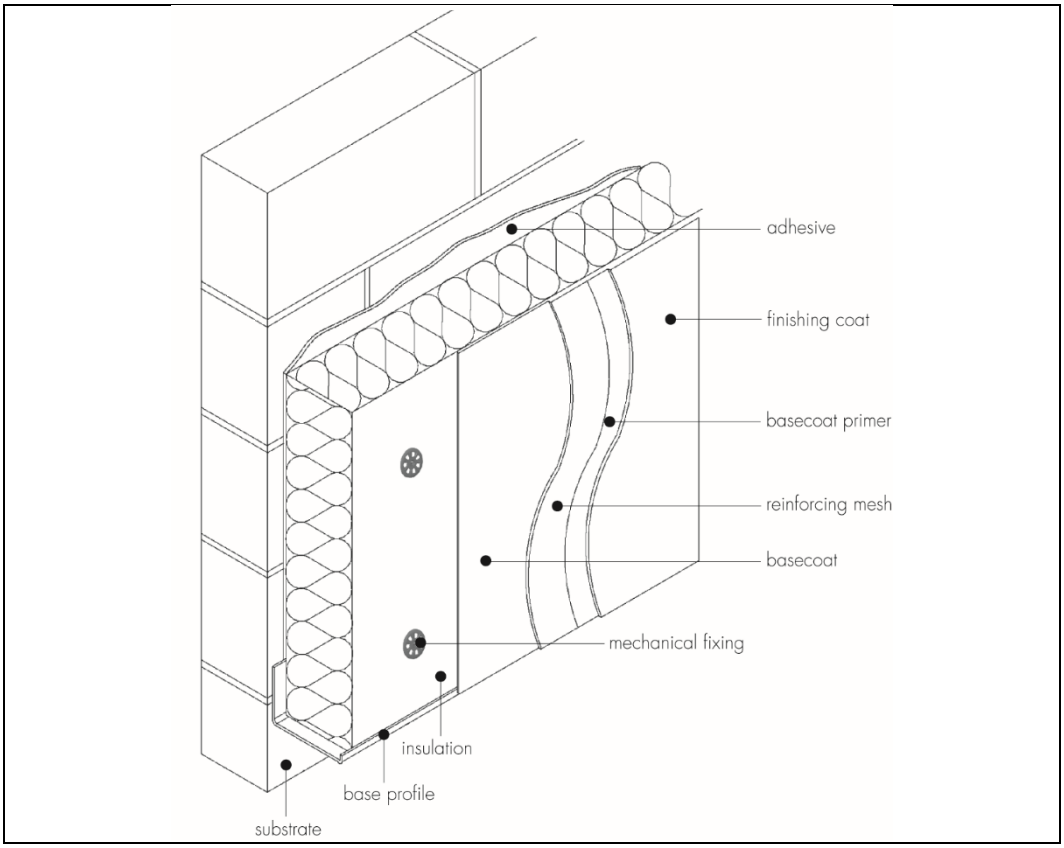

1.4 Ancillary materials used with the system are:

- a range of aluminium, PVC-U or stainless steel profiles, comprising:
  - base profile
  - edge profile
  - corner profile with optional PVC-U nosing
  - render stop profile.

1.5 Ancillary materials also used with the system, but outside the scope of this Certificate, are:

- a range of aluminium, PVC-U or stainless steel profiles, comprising:
  - movement joint
  - expansion joint
- specialist profiles including parapet capping and flashing section
- profile connectors and fixings
- fungicidal wash
- silicone sealants
- expansion foam — polyurethane foam used for filling gaps between insulation slabs.

2 Manufacture

2.1 The system components are manufactured by the Certificate holder or bought in from suppliers, to an agreed specification.

2.2 As part of the assessment and ongoing surveillance of product quality, the BBA has:

- agreed with the manufacturer the quality control procedures and product testing to be undertaken
- assessed and agreed the quality control operated over batches of incoming materials
- monitored the production process and verified that it is in accordance with the documented process
- evaluated the process for management of nonconformities
- checked that equipment has been properly tested and calibrated

- undertaken to carry out the above measures on a regular basis through a surveillance process, to verify that the specifications and quality control being operated by the manufacturer are being maintained.

2.3 The management system of Mapei UK Ltd has been assessed and registered as meeting the requirements of BS EN ISO 9001 : 2015 and BS EN ISO 14001 : 2015 by Certiquality (Certificates 15835 and 15837 respectively).

3 Delivery and site handling

3.1 The MW insulation slabs are delivered in sealed packs; each pack carries the product identification and manufacturer's batch numbers.

3.2 The other components are delivered in the quantities and packaging listed in Table 1.

Table 1 Component supply details

Component	Quantity and package
Adhesive/basecoat – Mapetherm AR1 GG	25 kg bag
Reinforcement mesh – Mapetherm Net	50 m roll, 1 m wide
Mechanical fixings	boxed by manufacturer
Primer	
Quarzolite Base Coat primer	20 kg tubs
Silancolor Base Coat primer	20 kg tubs
Silexcolor Base Coat primer	20 kg tubs
Finishing coats:	
Quarzolite Tonachino	20 kg plastic buckets
Quarzolite Graffiato	20 kg plastic buckets
Silancolor Tonachino	20 kg plastic buckets
Silancolor Graffiato	20 kg plastic buckets
Silexcolor Tonachino	20 kg plastic buckets
Silexcolor Graffiato	20 kg plastic buckets

3.3 The insulation must be stored on a firm, clean, level base, off the ground and under cover until required for use. Care must be taken when handling to avoid damage.

3.4 The insulation must be protected from prolonged exposure to sunlight, either by storing opened packs under cover or re-covering with opaque polythene sheeting.

3.5 The adhesive, basecoat and topcoats, and all cementitious materials must be stored in dry conditions within 5 and 30°C, off the ground and protected from moisture. Contaminated material must be discarded.

3.6 The primer should be stored in a safe area, under cover, and protected from excessive heat and frost at all times.

Assessment and Technical Investigations

The following is a summary of the assessment and technical investigations carried out on the Mapetherm Mineral Wool External Wall Insulation System.

Design Considerations

4 General

4.1 The Mapetherm Mineral Wool External Wall Insulation System, when installed in accordance with this Certificate, are satisfactory for use in reducing the thermal transmittance (U value) of external masonry or concrete walls of new and existing buildings. It is essential that the detailing techniques specified in this Certificate are carried out to a high standard if the ingress of water into the insulation is to be avoided and the full thermal benefit obtained from treatment with the system (eg the insulation must be protected by an overhang, and window sills should be designed and installed so as to direct water away from the building).

4.2 For improved thermal/carbon-emissions performance of the structure, the designer should consider additional/alternative fabric and/or services measures.

4.3 The system is for application to the outside of external walls of masonry, normal weight concrete, lightweight concrete, autoclaved concrete and no-fines concrete construction, on new or existing domestic and non-domestic buildings (with or without existing render) with height and boundary restrictions (see section 8 of this Certificate). Prior to installation of the system, wall surfaces should comply with section 14.

4.4 New walls subject to the national Building Regulations should be constructed in accordance with the relevant recommendations of:

- BS EN 1992-1-1 : 2004 and its UK National Annex
- BS EN 1996-1-1 : 2005 and its UK National Annex
- BS EN 1996-2 : 2006 and its UK National Annex
- BS 8000-0 : 2014
- BS 8000-2.2 : 1990
- BS 8000-3 : 2001.

4.5 New walls not subject to regulatory requirements should also be built in accordance with the Standards identified in section 4.4.

4.6 Movement joints should be incorporated into the system in line with existing movement joints in the building structure in accordance with the Certificate holder's recommendations for the specific installation.

4.7 The system will improve the weather resistance of a wall and provide a decorative finish. However, for existing buildings, they should only be installed where there are no signs of dampness on the inner surface of the wall other than those caused solely by condensation.

4.8 The effect of the system on the acoustic performance of a construction is outside the scope of this Certificate.

4.9 The fixing of sanitary pipework, plumbing, rainwater goods, satellite dishes, clothes lines, hanging baskets and similar items to the system is outside the scope of this Certificate. See section 4.10 of this Certificate.

4.10 External pipework and ducts should be removed before installation, and alterations made to underground drainage to accommodate repositioning of the pipework to the finished face of the system. The Certificate holder may advise on suitable fixing methods, but these are outside the scope of this Certificate.

4.11 The designer should select a construction appropriate to the local wind-driven rain index, paying due regard to the design detailing, workmanship and materials to be used.

4.12 It is essential that the system is installed and maintained in accordance with the conditions set out in this Certificate.

5 Practicability of installation

The system should only be installed by specialist contractors who have successfully undergone training and registration by the Certificate holder (see section 15).

Note: The BBA operates a UKAS-accredited Approved Installer Scheme for external wall insulation (non-mandatory); details of approved installer companies are included on the BBA's website (www.bbacerts.co.uk).

6 Thermal performance

6.1 Calculations of thermal transmittance (U value) should be carried out in accordance with BS EN ISO 6946 : 2017 and BRE Report BR 443 : 2006, using the declared thermal conductivity (λ_D) value of 0.036 $W \cdot m^{-1} \cdot K^{-1}$.

6.2 The U value of a completed wall will depend on the selected insulation type and thickness, fixing method and type and number of fixings, and the insulating value of the substrate masonry and its internal finish. Calculated U values for sample constructions in accordance with the national Building Regulations are given in Table 2 and are based on the thermal conductivity specified in section 6.1.

Table 2 Insulation thickness required to achieve U values(1)(2)(3) given in the national Building Regulations

U value(4) ($W \cdot m^{-2} \cdot K^{-1}$)	**Insulation thickness(3) requirement (mm)**	
	215 mm brickwork, λ = 0.56 $W \cdot m^{-1} \cdot K^{-1}$	**200 mm dense blockwork, λ = 1.75 $W \cdot m^{-1} \cdot K^{-1}$**
	Mapetherm MW Dual Density 036	
0.18	190	190
0.19	170	180
0.25	120	130
0.26	120	130
0.28	110	120
0.30	100	110
0.35	80	90

(1) Wall construction inclusive of 13 mm plaster (λ = 0.57 $W \cdot m^{-1} \cdot K^{-1}$), brickwork (protected) with 17.1% mortar or dense blockwork with 6.7% mortar (□ = 0.88 $W \cdot m^{-1} \cdot K^{-1}$). Declared thermal conductivity (λ_D) of insulation is as specified in section 6.1. A 6 mm thick adhesive layer with λ = 0.43 $W \cdot m^{-1} \cdot K^{-1}$ covering 40% of the area is also included, and a slab emissivity of 0.9, together with an external render thickness of 7 mm with λ = 1.0 $W \cdot m^{-1} \cdot K^{-1}$.

(2) Calculations based on a mechanically fixed system that included 7 fixings (with galvanized steel pin) per m^2 with a point thermal transmittance (x_p) of 0.001 $W \cdot K^{-1}$ per pin. Use of other types of fixings should be calculated in accordance with BS EN ISO 6946 : 2017. A gap correction (□*U*″) of zero is assumed.

(3) Based upon incremental insulation thickness of 10 mm.

(4) When applying the maximum available insulation thickness, these walls can achieve U values of 0.14 $W \cdot m^{-2} \cdot K^{-1}$.

6.3 Care must be taken in the overall design and construction of junctions with other elements and openings to minimise thermal bridges and air infiltration. Detailed guidance can be found in the documents supporting the national Building Regulations.

7 Strength and stability

General

7.1 The Certificate holder is ultimately responsible for the design of the system and it Is the responsibility of the company installing the system to accurately follow the installation instructions (see also section 5). The Certificate holder must also verify that a suitably experienced and qualified individual (with adequate professional indemnity) establishes that:

- the wind loads on the different zones of the building's elevation for the specific geographical location have been calculated correctly (see section 7.3)
- the system can adequately resist and safely transfer the calculated loads, accounting for all possible failure modes, to the substrate wall and supporting structure (see sections 7.3 to 7.6).

7.2 The substrate and supporting structure must be capable of transferring all additional loading due to the installation of system to the ground in a satisfactory manner. The adequacy of the substrate and supporting structure must be verified by the person or party responsible for the global stability of the building to which the system is applied. Any defects should be made good prior to the system being installed.

7.3 The wind loads on the walls should be calculated, taking into account all relevant factors such as location and topography, in accordance with BS EN 1991-1-4 : 2005 and its UK National Annex. All of the factors affecting wind load on each elevation and specific zones of the building must be considered. In accordance with BS EN 1990 : 2002 and its UK National Annex, a partial factor of 1.5 must be applied to the calculated characteristic wind pressure values to establish the design wind load to be resisted by the system.

7.4 Installations correctly designed in accordance with this Certificate will safely accommodate the applied loads due to self-weight of the system, wind and impact.

7.5 Positive wind load is transferred to the substrate wall directly via compression through the render and insulation system.

7.6 Negative wind load is transferred to the substrate wall via[(1)(2)]:

- the bond between the insulation and render system (see section 7.7)
- the pull-out resistance of the fixing from the substrate wall (see section 7.8)
- the pull-through resistance of the fixing (see section 7.9).

(1) For a mechanically fixed system with supplementary adhesive, the contribution of the adhesive is not considered when calculating resistance to wind load.
(2) Further guidance is available from BBA Guidance Note 1, available on the BBA website (www.bbacerts.co.uk).

7.7 The characteristic bond resistance between the insulation and render interface derived from test results was 10 $kN \cdot m^{-2}$. The design resistance of the bond between the insulation and render (N_{RD1}) should be taken as the characteristic bond resistance divided by a partial factor of 9.

7.8 Typical characteristic pull-out resistances for the fixings taken from the corresponding European Technical Assessment (ETA) are given in Table 3; the values are dependent on the fixing type and must be selected to suit the specific loads and substrate concerned. In situations where suitable data does not exist[(1)], the characteristic pull-out resistance must be established from site-specific pull-out tests conducted on the substrate of the building to ascertain the minimum resistance to pull-out failure of the fixings, and determined in accordance with the guidance given in EOTA TR051 : 2016 (minimum test characteristic value = 0.6 x mean of 5 lowest test results). To obtain the design pull-out resistance of the fixings (N_{RD2}), this characteristic pull-out resistance should then be divided by the partial factor given in Table 3.

(1) To qualify as suitable data, the age and condition of the substrate must be equivalent to that used to establish the values in the ETA.

Table 3 Fixings — typical characteristic pull-out strengths

Fixing type[(1)]	**ETA number**	**Substrate**	**Drill diameter (mm)**	**Effective anchorage depth (mm)**	**Characteristic pull out strength (kN)**[(2)]	**Partial safety factor**
EJOT H1 eco	11/0192	Concrete C12/15 Clay brickwork	8	25	0.9	2

(1) The minimum values for plate stiffness of fixings is 0.3 $kN \cdot mm^{-2}$, and the load resistance is 1.0 kN.
(2) Values are determined in accordance with EAD 330196-00-0604 : 2016 and are dependent on the substrate. The Use Categories are defined in the corresponding ETA.

7.9 The characteristic pull-through resistance of the fixings was determined from tests using a 60 mm diameter fixing plate and minimum insulation thickness of 40 mm. The design resistance per fixing (N_{RD3}) is obtained by applying an appropriate partial factor as shown in Table 4.

Table 4 Design pull-through resistances

Factor (unit)	**MW Insulation 1200 x 600 mm**	
	Pull through data	
Tensile resistance of the insulation ($kN \cdot m^{-2}$)	≥ 10	
Fixing type(1)	Test data obtained for fixing with plate stiffness ≥ 0.3 $kN \cdot mm^{-2}$ and load resistance of fixing plate ≥ 1.0kN	
Fixing plate diameter (mm)	≥ 60	
Insulation thickness (mm)	≥ 40	
Characteristic pull-through resistance(2) per fixing kN	Panel joints	0.150
	At panel	0.300
Partial factor(3)	2.5	
Design pull-through resistance per fixing (N_{RD3}) kN	Panel joints	0.060
	At panel	0.120
Design pull-through resistance per slab kN (based on the minimum number of fixings)(4)	0.600	
Design pull-through resistance per slab kN (based on maximum number of fixings)(5)	1.080	

(1) See Table 3 for typical characteristic pull-out resistance of the fixings.
(2) Characteristic pull-through resistance of insulation over the head of the fixing, in accordance with BS EN 1990 : 2002, Annex D7.2 and its UK National Annex.
(3) The partial factor is based on the assumption that all insulation slabs are quality controlled and tested to establish tensile strength perpendicular to the face of the slab.
(4) The minimum design pull through resistance per slab is based on a minimum of 5 fixings per slab (1200 x 600 mm), which equates to approximately 7 fixings per m^2. The design resistance for the minimum number of fixings is based on the fixing pattern provided in Figure 3 of this Certificate and minimum insulation thickness (as specified in this Table). The fixing pattern and interaction of the fixings should be considered when calculating the design resistance per slab.
(5) The maximum design pull through resistance per slab is based on a maximum of 9 fixings per slab (1200 x 600 mm), which equates to approximately 13 fixings per m^2. The design resistance for the maximum number of fixings is only applicable to the minimum insulation thickness tested and as specified in this Table. The fixing pattern, insulation thickness and interaction of the fixings should be considered when calculating the design resistance per slab.

7.10 The number and spacing of the fixings should be determined by the Certificate holder. The number of fixings must not be less than the minimum specified for the system and the fixings should be symmetrically positioned and evenly distributed about the centre of the slab both vertically and horizontally except at openings and building corners.

7.11 The data obtained from sections 7.7 to 7.9 must be assessed against the design wind load and the following expression must be satisfied:

For safe design:

$Rd \geq W_e$

$Rd_{b.ins/rend} = A_r * N_{Rd1}$
$Rd_{pull\text{-}out} = n * N_{RD2}$
$Rd_{pull\text{-}through} = (N_{RD3panel} * n_{panel}) + (N_{RD3joint} * n_{joint})/A_{slab}$

Where:

Rd	is the design ultimate resistance ($kN \cdot m^{-2}$) taken as the minimum of $Rd_{b.ins/rend}$, $Rd_{pull\text{-}out}$ and $Rd_{pull\text{-}through}$
W_e	is the applied ultimate wind load ($kN \cdot m^{-2}$)
$Rd_{b.ins/rend}$	is the design bond resistance between the insulation and render ($kN \cdot m^{-2}$)
$Rd_{pull\text{-}out}$	is the design pull-out resistance of the insulation fixing per metre square ($kN \cdot m^{-2}$)
$Rd_{pull\text{-}through}$	is the design pull-through resistance of the insulation fixing per metre square ($kN \cdot m^{-2}$)
A_r	is the reinforced basecoat bond area (based on % area covered)
N_{RD1}	is the design adhesive bond resistance between the insulation and render, based on test ($kN \cdot m^{-2}$)
n	is the number of anchor fixings per m^2
N_{RD2}	is the design pull out resistance per fixing based on test (kN)
$N_{RD3panel}$	is the design pull-through resistance per anchor <u>not</u> placed at the panel joint, based on test (kN)
$N_{Rd3joint}$	is the design pull-through resistance per anchor placed at the panel joint, based on test (kN)
n_{panel}	is the number of internal anchors in a panel
n_{joint}	is the number of joint anchors in a panel
A_{slab}	is the area of the slab (m^2).

7.12 The insulation system is mechanically fixed to the substrate wall with a minimum of five fixings per slab or approximately seven fixings per metre square, as per the fixing patterns shown in Figure 3, and in conjunction with a minimum 40% coverage of supplementary adhesive (see section 16). Additional fixings may be required, depending on the results of the calculations detailed above for the specific site.

Impact resistance

7.13 Hard body impact tests were carried out in accordance with ETAG 004 : 2013. The system is suitable for use in the Use Categories up to and including those specified in Table 5 of this Certificate.

Table 5 impact resistance

	Use Category(1)	
Rendering system: **Basecoat (Mapetherm AR1 GG) + Mapetherm primers and finishing coats indicated below:**	**Mapetherm Net** **(see section 1.3 – Reinforcement)**	
	Single layer	**Double layer**
Quarzolite Base Coat primer + Quarzolite Tonachino Quarzolite Base Coat primer + Quarzolite Graffiato	Category II	Category II
Silancolor Base Coat primer + Silancolor Tonachino Silancolor Base Coat primer + Silancolor Graffiato	Category II	Category II
Silexcolor Base Coat primer + Silexcolor Tonachino Silexcolor Base Coat primer + Silexcolor Graffiato	Category II	Category II

(1) The Use Categories are defined in ETAG 004 : 2013 as:
- Category I — a zone readily accessible at ground level to the public and vulnerable to hard body impacts but not subjected to abnormally rough use
- Category II — a zone liable to impacts from thrown or kicked objects, but in public locations where the height of the system will limit the size of the impact; or at lower levels where access to the building is primarily to those with some incentive to exercise care
- Category III — a zone not likely to be damaged by normal impacts caused by people or by thrown or kicked objects.

8 Behaviour in relation to fire

General

8.1 The Certificate holder has not declared a reaction to fire classification for the system to BS EN 13501-1: 2018.

8.2 In England, Wales and Northern Ireland, the system may only be used on buildings with no storey more than 18 m above ground level and which are one metre or more from a boundary. Additional restrictions apply for assembly and recreation buildings. With minor exceptions, the system should be included in calculations of unprotected area.

8.3 For all buildings in Scotland, the system is only suitable for use more than one metre from the boundary. With minor exceptions, the system should be included in calculations of unprotected area.

8.4 In Scotland, the system should not be used on any building with a storey more than 11 m above the ground, or on any entertainment or assembly building with a total storey area more than 500 m^2, or on any hospital or residential care building with a total storey area more than 200 m^2.

8.5 For application to second storey walls and above, it is recommended that the designer considers at least one stainless steel fixing per square metre and fire barriers in line with compartment walls and floors as advised in BRE Report BR 135 : 2013.

8.6 Designers should refer to the relevant national Building Regulations and guidance for detailed conditions of use, particularly in respect of requirements for substrate fire performance, cavity barriers, service penetrations and combustibility limitations for other materials and components used in the overall wall construction.

9 Proximity of flues and appliances

When the system is installed in close proximity to certain flue pipes, the relevant provisions of the national Building Regulations should be satisfied:

England and Wales — Approved Document J
Scotland — Mandatory Standard 3.19, clause 3.19.4[(1)(2)]

(1) Technical Handbook (Domestic).
(2) Technical Handbook (Non-Domestic).

Northern Ireland — Technical Booklet L.

10 Water resistance

10.1 The system will provide a degree of protection against rain ingress. However, care should be taken to ensure that walls are adequately watertight prior to the application of the system. The system must only be installed where there are no signs of dampness on the inner surface of the substrate other than those caused solely by condensation.

10.2 Designers and installers should take particular care in detailing around openings, penetrations and movement joints to minimise the risk of water ingress.

10.3 The guidance given in BRE Report BR 262 : 2002 should be followed in connection with the watertightness of solid wall constructions. The designer should select a construction appropriate to the local wind-driven rain index, paying due regard to the design detailing, workmanship and materials to be used.

10.4 At the top of walls, the system should be protected by a coping, adequate overhang or other detail designed for use with this type of system (see section 16).

11 Risk of condensation

11.1 Designers must ensure that an appropriate condensation risk analysis has been carried out for all parts of the construction, including openings and penetrations at junctions between the insulation system and windows, to minimise the risk of condensation. The recommendations of BS 5250 : 2011 should be followed.

Surface condensation

11.2 Walls will adequately limit the risk of surface condensation when the thermal transmittance (U value) does not exceed 0.7 $W \cdot m^{-2} \cdot K^{-1}$ at any point and the junctions with other elements and openings comply with section 6.3.

11.3 Walls will adequately limit the risk of surface condensation when the thermal transmittance (U value) does not exceed 1.2 $W \cdot m^{-2} \cdot K^{-1}$ at any point. Guidance may be obtained from BS 5250 : 2011 Section 4 and Annex G, and BRE Report 262 : 2002.

Interstitial condensation

11.4 Walls incorporating the system will adequately limit the risk of interstitial condensation when they are designed and constructed in accordance with BS 5250 : 2011, Section 4 and Annexes D and G.

11.5 The water vapour resistance factor (μ) and equivalent air layer thickness (s_d) are shown in Table 6.

Table 6 Water vapour resistance factor and equivalent air layer thickness

Layer	Components/systems	Thickness (mm)	μ	s_d (m)
Insulation	MW insulation (MW Dual Density 036)	40 to 250	1(1)	—
Rendering system: Basecoat (Mapetherm AR1 GG) + Mapetherm primers and finishing coats indicated below:				
Quarzolite Base Coat primer + Quarzolite Tonachino or Quarzolite Graffiato (2 mm particle size)		8(2)	—	0.35
Silancolor Base Coat primer + Silancolor Tonachino or Silancolor Graffiato (2 mm particle size)		8(2)	—	0.41
Silexcolor Base Coat primer + Silexcolor Tonachino or Silexcolor Graffiato (2 mm particle size)		8(2)	—	0.16

(1) The factor (μ value) of the insulation is taken from BS EN ISO 10456 : 2007.
(2) Includes reinforcement mesh embedded in Mapetherm AR1 GG basecoat (applied to thickness of 4 to 7 mm), relevant primer and indicated finish coat.

12 Maintenance and repair

12.1 An initial inspection should be made within 12 months and regularly thereafter to include:

- visual inspection of the render for signs of damage. Cracks in the render exceeding 0.2 mm must be repaired
- examination of the sealant around openings and service entry points
- visual inspection of architectural details designed to shed water to confirm that they are performing properly
- visual inspection to ensure that water is not leaking from external downpipes or gutters; such leakage could penetrate the rendering
- necessary repairs effected immediately and the sealant joints at window and door frames replaced at regular intervals
- maintenance schedules, which should include the replacement and resealing of joints, for example between the insulation system and window and door frame.

12.2 Damaged areas must be repaired using the appropriate components and procedures detailed in the Certificate holder's installation instructions and in accordance with BS EN 13914-1 : 2016.

13 Durability

13.1 The system will remain effective for at least 30 years, provided any damage to the surface finish is repaired immediately and regular maintenance is undertaken, as described in section 12.

13.2 Any render containing Portland cement may be subject to lime bloom. The occurrence of this may be reduced by avoiding application in adverse weather conditions. The effect is transient and less noticeable on lighter colours.

13.3 The render may become discoloured with time, the rate depending on the initial colour, the degree of exposure and atmospheric pollution, as well as the design and detailing of the wall. In common with traditional renders, discoloration by algae and lichens may occur in wet areas. The appearance may be restored by a suitable power wash or, if required, by over coating.

13.4 To maintain a high quality aesthetic appearance, it may be necessary to periodically overcoat the building using a suitable masonry coating (ie one covered by a valid BBA Certificate for this purpose). Care should be taken not to adversely affect the water vapour transmission or fire characteristics of the system. The advice of the Certificate holder should be sought as to the suitability of a particular product.

Installation

14 Site survey and preliminary work

14.1 A pre-installation survey of the property must be carried out to determine suitability for treatment and the need for any necessary repairs to the building structure before application of the system. A specification is prepared for each elevation of the building indicating:

- the position of beads
- detailing around windows and doors and at eaves
- damp-proof course (dpc) level
- exact position of expansion joints, if required
- areas where flexible sealants must be used
- any alterations to external plumbing.

14.2 The survey should include tests conducted on the walls of the building by the Certificate holder or their approved installers (see section 15) to determine the pull-out resistance of the proposed mechanical fixings. An assessment and recommendation is made on the type and number of fixings required to withstand the building's expected wind loading based on calculations using the test data and pull-out resistance (see section 7).

14.3 All modifications, such as alterations to external plumbing and necessary repairs to the building structure, must be completed before installation of the system commences.

14.4 Surfaces should be sound, clean and free from loose material. The flatness of surfaces must be checked; this may be achieved using a straight-edge tool spanning the storey height. Any excessive irregularities, ie greater than 10 mm in one metre, must be made good prior to installation, to ensure that the insulation slabs are installed with a smooth, in-plane finished surface.

14.5 Where surfaces are covered with an existing rendering, it is essential that the bond between the background and the render is adequate. All loose areas should be hacked off and reinstated.

14.6 On existing buildings, purpose-made window sills must be fitted to extend beyond the finished face of the system. New buildings should incorporate suitably deep sills (see Figure 9).

14.7 In new buildings, internal wet work (eg screed or plastering) should be completed and allowed to dry prior to the application of the system.

15 Approved installers

Application of the system, within the context of this Certificate, must be carried out by approved installers recommended or recognised by the Certificate holder. Such an installer is a company:

- employing operatives who have been trained and approved by the Certificate holder to install the system
- which has undertaken to comply with the Certificate holder's application procedure, containing the requirement for each application team to include at least one member-operative trained by the Certificate holder
- subject to at least one inspection per annum by the Certificate holder to ensure suitable site practices are being employed. This may include unannounced site inspections.

16 Procedure

General

16.1 Installation of the system must be carried out in accordance with this Certificate and the Certificate holder's current installation instructions.

16.2 Weather conditions should be monitored to ensure correct application and curing conditions. Application of coating materials must not be carried out at temperatures below 5°C or above 30°C, or if exposure to frost is likely, and the coating must be protected from rapid drying. Installation should not take place during rainfall or if rain is anticipated. In addition, cementitious-based renders must not be applied if the temperature is likely to fall below 0°C.

16.3 Where required, a fungicidal wash is applied to the entire surface of the external wall by brush, roller or spray.

16.4 All rendering should be in accordance with the relevant recommendations of BS EN 13914-1 : 2016.

16.5 The render must be protected from rapid drying and should not be applied on elevations in direct sunlight or where the substrate is hot.

Positioning and securing insulation slabs

16.6 The base profile is secured to the external wall above the dpc using the profile fixings at approximately 500 mm centres (see Figure 2). Base rail connectors are installed at all rail joints. Extension profiles are fixed to the front lip of the base profile or stop end channel where appropriate.

Figure 2 Typical section at base profile

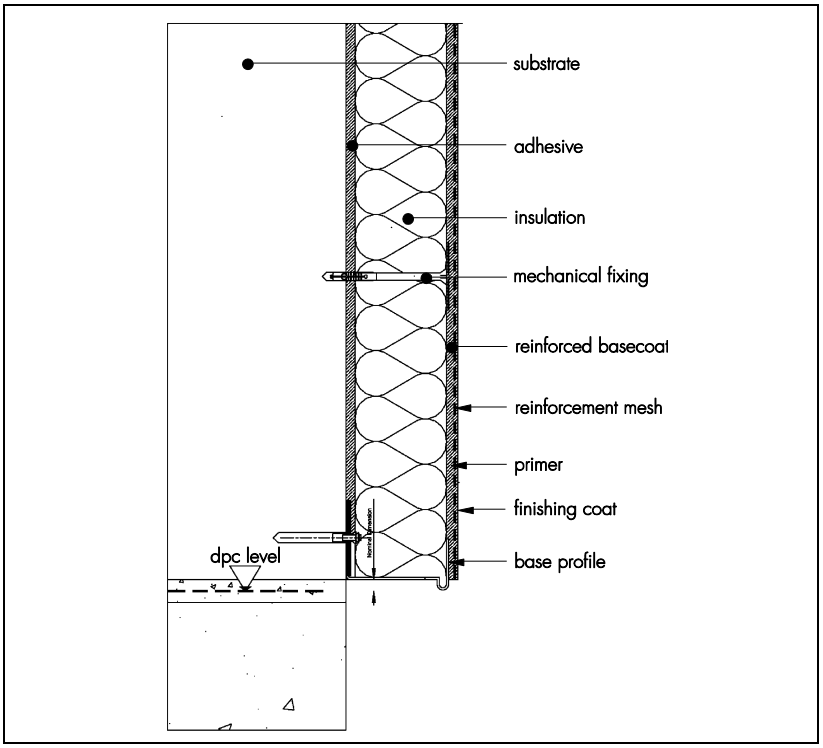

16.7 The supplementary adhesive is prepared by mixing each bag with the required amount of clean water in a suitable container, and thoroughly mixing for at least five minutes using a paddle mixer to create a paste-like mortar in accordance with the Certificate holder's instructions (see section 1.3). After allowing the adhesive to rest for two minutes, it is stirred again.

16.8 The adhesive is applied in a continuous line around the perimeter of the insulation slab (at least 30 mm wide) with six additional dabs of adhesive (approximately 120 mm in diameter) distributed uniformly over the remaining surface. The amount of adhesive applied should cover at least 40% of the surface after the slabs have been pressed against the wall. Alternatively, it can be applied over the entire face of the slab using a notched trowel.

16.9 The first run of slabs is placed on the base profile with adhesive applied. The slabs must be pressed firmly against the wall and butted tightly together and aligned to achieve a level finish. Subsequent rows of slabs are positioned so that the vertical slab joints are staggered and overlapped at the building corners and so the slab joints do not occur within 200 mm of the corners of openings (see Figure 3).

16.10 The alignment should be constantly checked as work proceeds. Joints between the slabs up to 10 mm can be filled with foam filler approved by the Certificate holder. Gaps greater than this can be filled with slivers of insulation slab.

16.11 After the adhesive has set (after 24 hours), the mechanical fixings are applied through the insulation slab into the substrate wall, as described in section 16.12. The number of fixings should be increased as required (eg at the corner zones of the building), depending on the location of the building, wind load calculation and the installation height. Details of mechanical fixings (including the fixing layout on the insulation slabs) are based on pull-out test results, which would be dependent upon substrate type.

16.12 Holes are drilled equidistantly through the insulation slab into the substrate wall to a required depth, to allow for a minimum of five mechanical fixings per slab, forming a dice pattern, and with additional fixings around building corners. The mechanical fixings are inserted and tapped firmly into place, securing the slabs to the substrate. Around openings, additional fixings should be installed as determined by the system designer (see Figure 5).

Figure 3 Typical arrangement of insulation slabs and mechanical fixing pattern

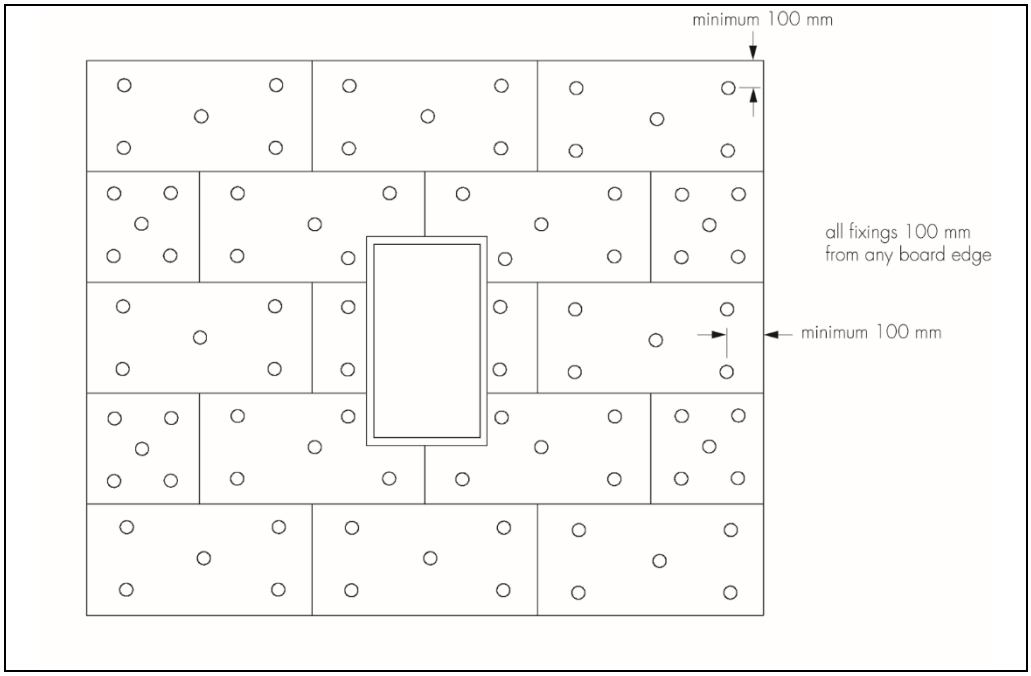

16.13 To fit around details such as doors and windows, insulation slabs may be cut with a sharp knife or a fine-tooth saw. If required, purpose-made window sills are fitted, which are designed to prevent water ingress and incorporate drips to shed water clear of the system (see Figure 9). However, their performance is outside the scope of this Certificate.

16.14 Installation continues until the whole wall is completely covered including, where appropriate, into the building soffits.

16.15 Window and door reveals should be insulated to minimise the effects of cold bridging. Where clearance is limited, strips of insulation should be installed to suit available margins and details (see Figure 8).

16.16 Prior to the application of the render system, expanding foam sealing tape is inserted at window and door frame reveals, overhanging eaves, gas and electric meter boxes, wall vents, or where the render abuts any other building material or surface.

16.17 All corners are fixed with mesh angles installed with adhesive mortar. Where appropriate, application specific profiles are installed, to allow the rainwater to drain away.

Movement joints

16.18 Generally, movement joints are not required in the system but, if an expansion joint is incorporated in the substrate, then movement joints must be carried through the insulation system (see Figure 4).

Figure 4 Vertical expansion joint

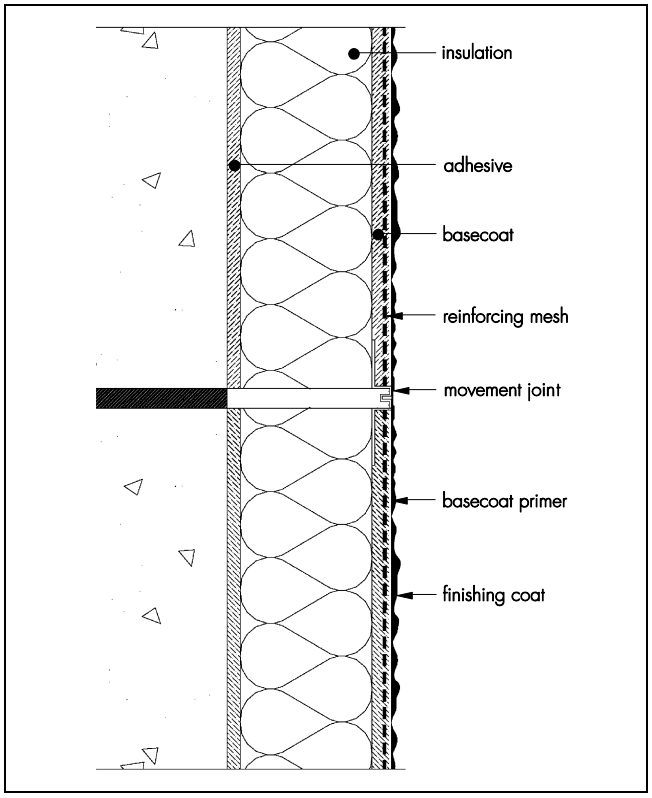

Application of basecoat and reinforcement mesh

16.19 The basecoat is prepared by mixing each bag with the required amount of clean water in a suitable container and thoroughly mixing for at least five minutes using a paddle mixer to create a paste-like mortar in accordance with the Certificate holder's instructions (see section 1.3).

16.20 To provide the necessary reinforcement, stress patches of reinforcement mesh (approximate size 250 by 250 mm) are applied with basecoat, diagonally over the insulation slabs at the corners of openings (see Figure 5).

Figure 5 Additional reinforcement and extra fixings around openings

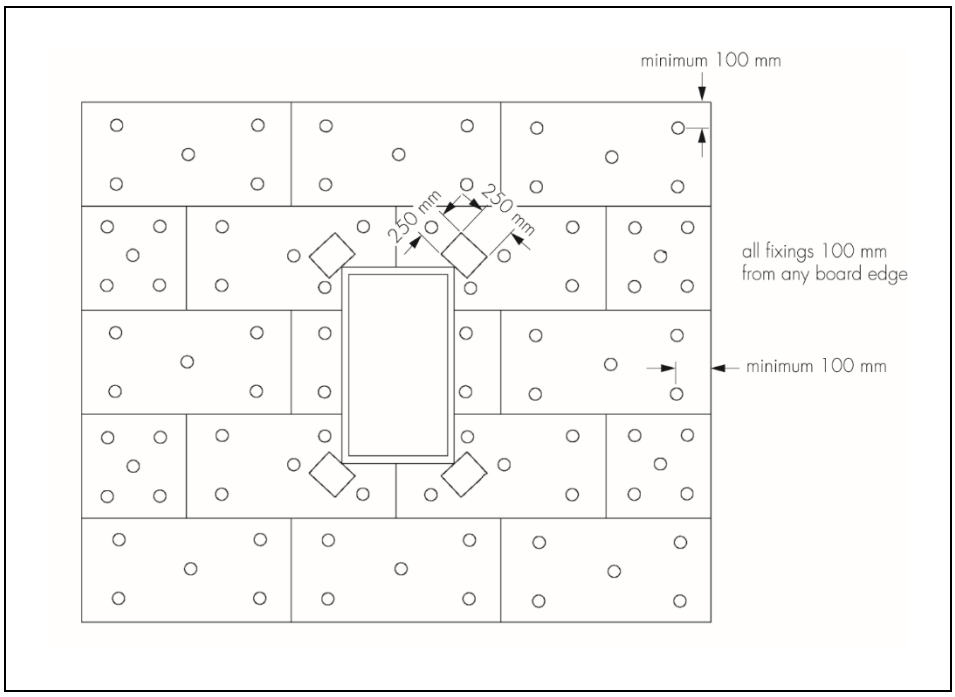

16.21 Basecoat is applied over the insulation slabs using a stainless steel trowel (use of a notched trowel is recommended to maintain the correct depth), and floated with a Darby float to a thickness of between 3 to 5 mm. The reinforcement mesh (with its concave surface to the wall) is applied and immediately embedded into the basecoat by trowelling from the centre to the edge; an additional light coat of basecoat is applied (whilst the first coat is still wet) to ensure the mesh is free of wrinkles.

16.22 Further basecoat to a thickness of 1 to 2 mm is then applied, to ensure the mesh is completely covered and the required minimum thickness of basecoat is achieved, whilst ensuring that the mesh is placed in the top one third of basecoat. The overall thickness of the reinforced basecoat must be a minimum of 4 mm.

16.23 The basecoat is applied progressively, working in one-metre sections in a vertical or horizontal direction. Overlapping at all mesh joints should not be less than 100 mm.

16.24 For areas requiring extra resistance to impact, two mesh layers are applied in two stages, as per the instructions in sections 16.21 to 16.23.

16.25 Once the whole wall is completed, the reinforced basecoat is left to dry thoroughly before the application of primer and the finish coat. The basecoat drying time will depend upon the conditions, but at least 48 hours should elapse.

Primer

16.26 After the basecoat has dried, the primer coat can be roller-applied, sprayed or applied with a long-hair brush, first making sure the basecoat is free from any irregularities (trowel-marks, exposed mesh, etc). It is recommended that the colour of the primer corresponds to the colour of the finish coat. The primer drying time will depend upon the conditions, but at least 12 hours should elapse.

Finish coat

16.27 Once the primer is thoroughly dry, the finish coat can be applied.

16.28 The render finishes are applied to the required thicknesses as regulated by the particle size (see section 1.3), using a stainless steel trowel and finished with a plastic trowel to create a textured finish. The drying time is dependent on conditions, but at least 24 hours should be allowed.

General guidelines

16.29 Care should be taken in the detailing of the system around openings and projections and at eaves (see Figures 6, 7 and 8) to ensure adequate protection against water ingress and to limit the risk of water penetrating the system.

16.30 Stop profiles are positioned vertically, eg at party wall positions where the adjoining house does not require treatment.

Figure 6 Roof eaves details

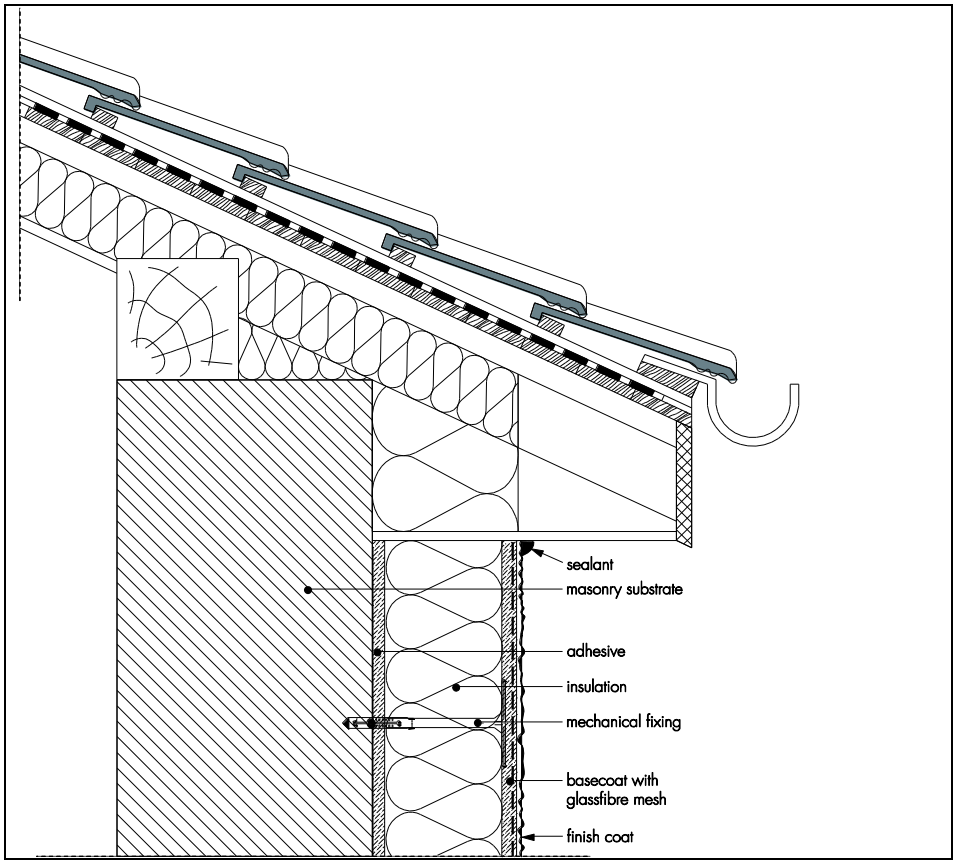

16.31 Continuous surfaces must be completed without a break, so the coatings must always be applied to a wet edge. Care should be taken to prevent the finish coats from either drying too rapidly or freezing.

Figure 7 Typical detail at window head details

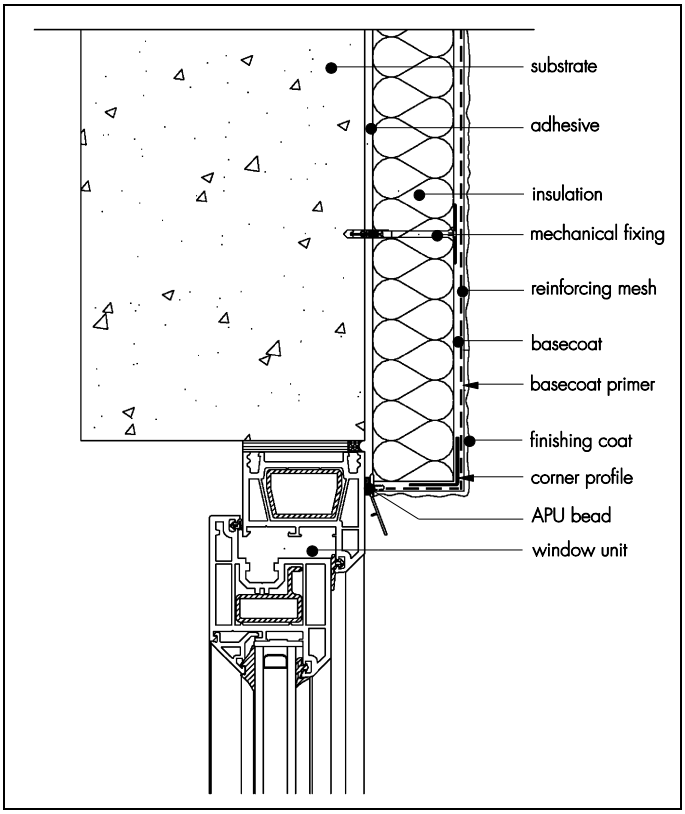

Figure 8 Typical window and door reveal details

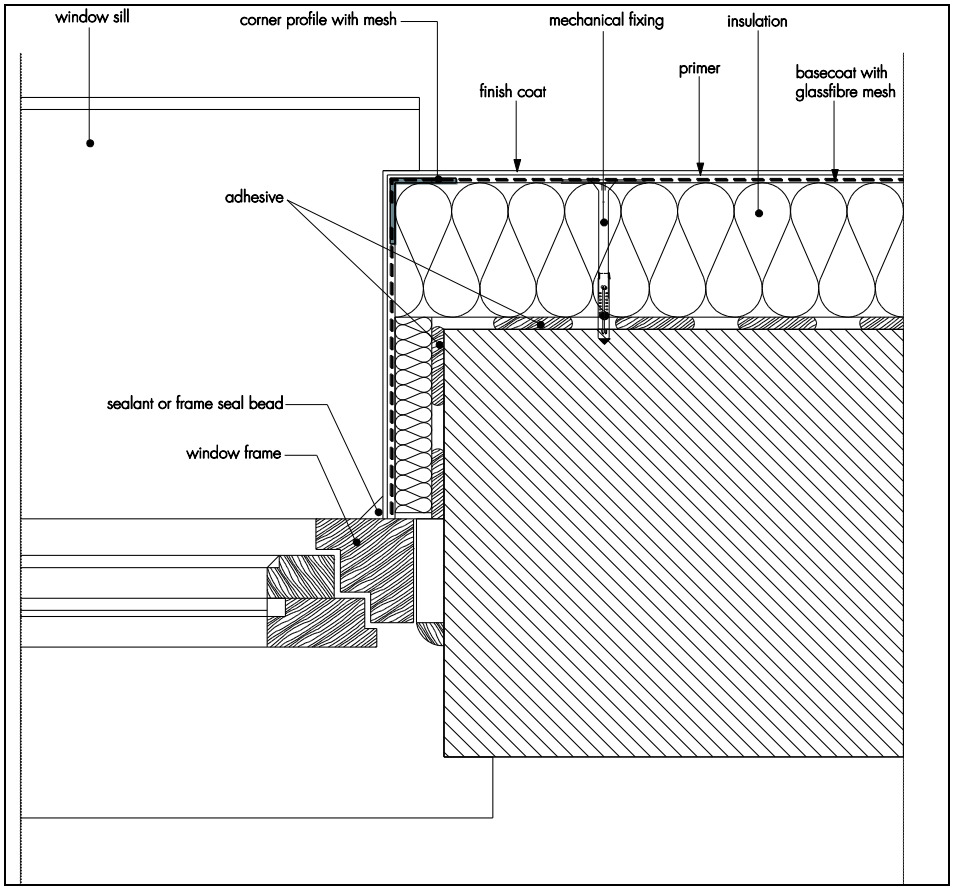

Figure 9 Window sill details

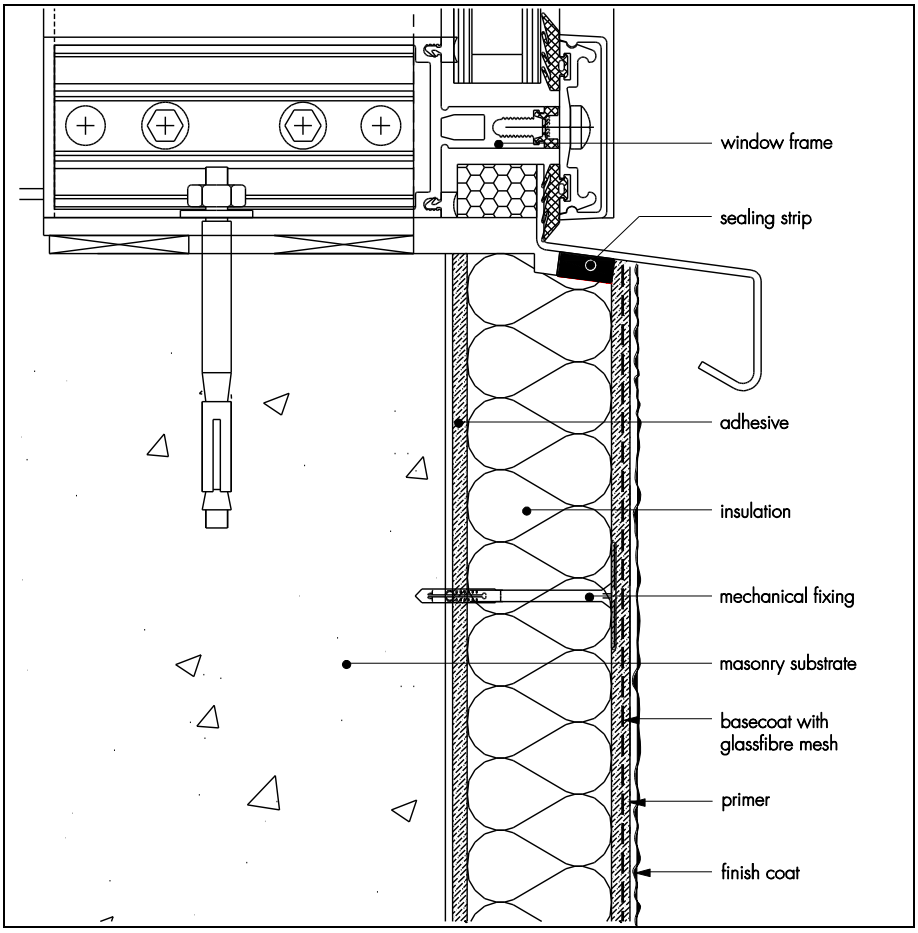

16.32 At the top of walls, the system must be protected by a coping, an adequate overhang or by an adequately sealed, purpose-made flashing (see Figure 10).

Figure 10 Parapet details

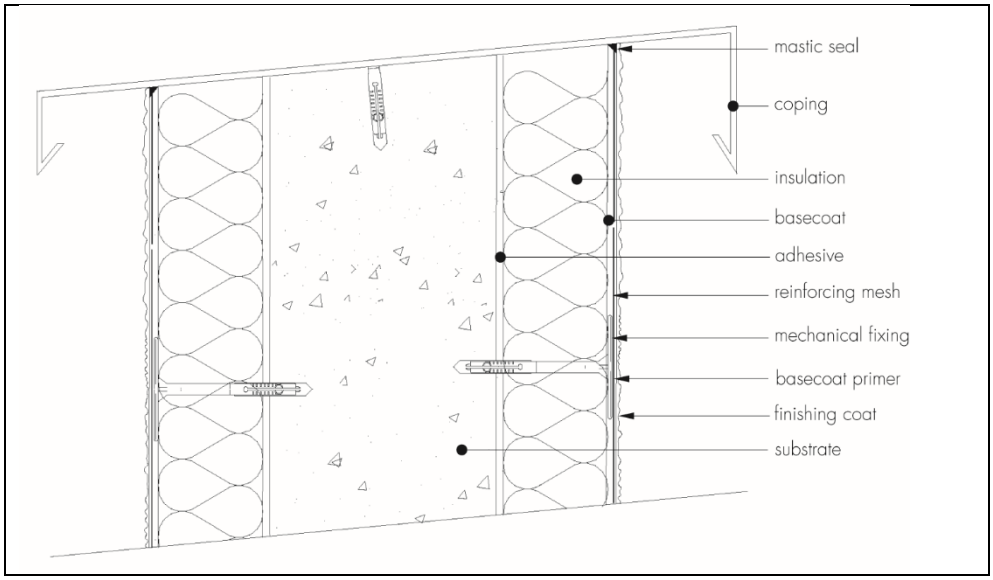

17 Investigations

17.1 The system was examined to determine:

- bond strength
- hygrothermal performance and resistance to freeze/thaw
- resistance to hard body impact
- water vapour permeability
- durability
- adequacy of mechanical fixing system
- the risk of interstitial condensation
- thermal conductivity.

17.2 The practicability of installation and the effectiveness of detailing techniques were assessed.

17.3 The manufacturing process was evaluated, including the methods adopted for quality control, and details were obtained of the quality and composition of the materials used.

Bibliography

BRE Report BR 135 : 2013 *Fire Performance of External Insulation For Walls of Multistorey Buildings*

BRE Report BR 262 : 2002 *Thermal insulation: avoiding risks*

BRE Report BR 443 : 2006 *Conventions for U-value calculations*

BS 5250 : 2011 + A1 : 2016*Code of practice for control of condensation in buildings*

BS 8000-0 : 2014 *Workmanship on construction sites — Introduction and general principles*
BS 8000-2.2 : 1990 *Workmanship on building sites — Code of practice for concrete work — Sitework with in situ and precast concrete*
BS 8000-3 : 2001 *Workmanship on building sites — Code of practice for masonry*

BS EN 1990 : 2002 + A1 : 2005 *Eurocode — Basis of structural design*
NA to BS EN 1990 : 2002 + A1 : 2005 UK National Annex to *Eurocode — Basis of structural design*

BS EN 1991-1-4 : 2005 *Eurocode 1 — Actions on structures — General actions — Wind actions*
NA to BS EN 1991-1-4 : 2005

BS EN 1992-1-1 : 2004 + A1 : 2010 *Eurocode 1 — Actions on structures — General actions*
NA to BS EN 1992-1-1 : 2004 + A1 : 2010 UK National Annex to *Eurocode 1 — Actions on structures — General actions*

BS EN 1996-1-1 : 2005 + A1 : 2012 *Eurocode 6 — Design on masonry structures — General rules for reinforced and unreinforced masonry structures*
NA to BS EN 1996-1-1 : 2005 + A1 : 2012 UK National Annex to *Eurocode 6 — Design on masonry structures — General rules for reinforced and unreinforced masonry structures*
BS EN 1996-2 : 2006 *Eurocode 6 — Design of masonry structures — Design considerations, selection of materials and execution of masonry*
NA to BS EN 1996-2 : 2006 UK National Annex to *Eurocode 6 — Design of masonry structures — Design considerations, selection of materials and execution of masonry*

BS EN 13162 : 2012 + A1 : 2015 *Thermal insulation products for buildings — Factory made mineral wool (MW) products — Specification*

BS EN 13501-1 : 2018 *Fire classification of construction products and building elements — Classification using test data from reaction to fire tests*

BS EN 13914-1 : 2016 *Design, preparation and application of external rendering and internal plastering — External rendering*

BS EN ISO 6946 : 2017 *Building components and building elements — Thermal resistance and thermal transmittance — Calculation method*

BS EN ISO 9001 : 2008 *Quality management systems — Requirements*

BS EN ISO 10456 : 2007 *Building materials and products — Hygrothermal properties — Tabulated design values and procedures for determining declared and design thermal values*

BS EN ISO 14001 : 2004 *Environmental management systems — Requirements with guidance for use*

EOTA TR051 : 2016 *Recommendations for job-site tests of plastic anchors and screws*

ETAG 004 : 2013 *External Thermal Insulation Composite Systems (ETICS) with Rendering*

18 Conditions

18.1 This Certificate:

- relates only to the product/system that is named and described on the front page
- is issued only to the company, firm, organisation or person named on the front page – no other company, firm, organisation or person may hold claim that this Certificate has been issued to them
- is valid only within the UK
- has to be read, considered and used as a whole document – it may be misleading and will be incomplete to be selective
- is copyright of the BBA
- is subject to English Law.

18.2 Publications, documents, specifications, legislation, regulations, standards and the like referenced in this Certificate are those that were current and/or deemed relevant by the BBA at the date of issue or reissue of this Certificate.

18.3 This Certificate will remain valid for an unlimited period provided that the product/system and its manufacture and/or fabrication, including all related and relevant parts and processes thereof:

- are maintained at or above the levels which have been assessed and found to be satisfactory by the BBA
- continue to be checked as and when deemed appropriate by the BBA under arrangements that it will determine
- are reviewed by the BBA as and when it considers appropriate.

18.4 The BBA has used due skill, care and diligence in preparing this Certificate, but no warranty is provided.

18.5 In issuing this Certificate the BBA is not responsible and is excluded from any liability to any company, firm, organisation or person, for any matters arising directly or indirectly from:

- the presence or absence of any patent, intellectual property or similar rights subsisting in the product/system or any other product/system
- the right of the Certificate holder to manufacture, supply, install, maintain or market the product/system
- actual installations of the product/system, including their nature, design, methods, performance, workmanship and maintenance
- any works and constructions in which the product/system is installed, including their nature, design, methods, performance, workmanship and maintenance
- any loss or damage, including personal injury, howsoever caused by the product/system, including its manufacture, supply, installation, use, maintenance and removal
- any claims by the manufacturer relating to CE marking.

18.6 Any information relating to the manufacture, supply, installation, use, maintenance and removal of this product/system which is contained or referred to in this Certificate is the minimum required to be met when the product/system is manufactured, supplied, installed, used, maintained and removed. It does not purport in any way to restate the requirements of the Health and Safety at Work etc. Act 1974, or of any other statutory, common law or other duty which may exist at the date of issue or reissue of this Certificate; nor is conformity with such information to be taken as satisfying the requirements of the 1974 Act or of any statutory, common law or other duty of care.